# ASSEMBLY INSTRUCTIONS

**ITEM CODE : IN968**

**ITEM DESCRIPTION: 2 DRAWER BEDSIDE IN CLASSIC GREY**

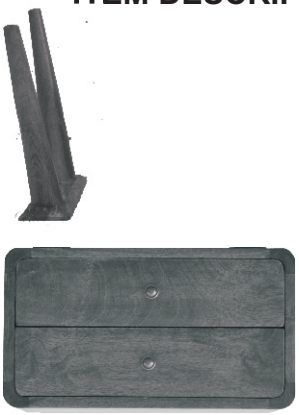

**1**

**Reverse the bedside & place the leg as shown & align the leg to match the apron.**

**Insert the Bolt to fix the leg with the Bedside top and tighten the nut with the washer as shown in fig1**

**2**

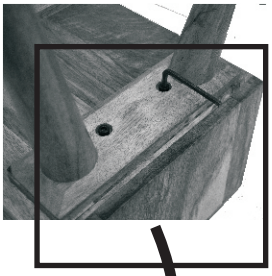

**3**

**Fix the other leg in the similar way**

**Reverse the bedside straight. Now your bedside is ready for use**
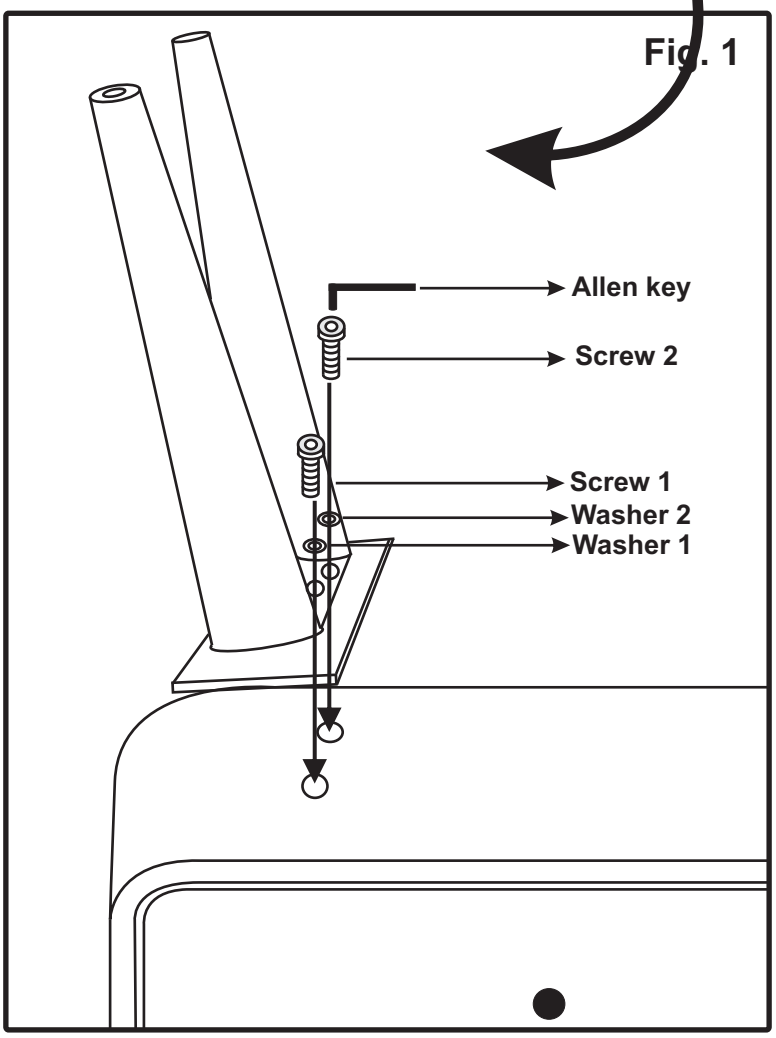
**4**